PGAS-1-TS LED Specifications

Wildlife Certified

Architectural - Site - Area - Outdoor - Wall Mount

The PGAS-1 LED luminaire from Visionaire combines contemporary design with new LED technology while maintaining a traditional fixture image. The LED performance and Life are maximized by the unique integral aluminum heat sink. It is an ideal replacement for the high-maintenance fluorescent or HID fixtures of yesterday.

The LED housing is cast aluminum with internal heat sink for maximum heat dissipation with 16 or 32 LEDs. The cast aluminum driver compartment allows the driver to operate cooler for long life.

Our Turtle Safe and Wildlife Certified LEDs operates at 590nm. Sixteen optical distribution patterns are available.

A durable polyester powder coat finish is guaranteed for five years and is available in standard or custom colors.

The PGAS-1 LED series is an exceptional choice for parking garage lighting and other wall mount applications.

Project Name:	
Catalog Number:	
Type:	
Date:	Location:

The Wildlife Lighting Program was developed by the Department of the Interior's U.S. Fish and Wildlife Service and the Florida Fish and Wildlife Conservation Commission to address light pollution issues in ecologically sensitive areas while ensuring human safety and security.

WILDLIFE LIGHTING
PROTECTING WILDLIFE THROUGH RESPONSIBLE LIGHTING PRACTICES

MODEL	OPTICS		LEDs	CURRENT	WAVELENGTH
PGAS-1	**T1** Type 1 **T2** Type 2 **T3** Type 3 **T3R** Type 3 Round **T3W** Type 3 Wide **T3LG** Type 3 Low Glare **T4A** Type 4 Automotive **T4** Type 4 **T4LG** Type 4 Low Glare	**T5** Type 5 **T5W** Type 5 Wide **T5WW** Type 5 Extra Wide **T5LG** Type 5 Low Glare **FN** Flood Narrow **FM** Flood Medium **FW** Flood Wide	**16LD** *WSC for 16LD Only **32LD**	**3** 350mA **5** 530mA	**TS** 590nm

VOLTAGE	MOUNTING	FINISH	CONTROL OPTIONS	SHIELD OPTIONS	OPTIONS
UNV 120-277V **8** 347V **5** 480V	**WM** Wall Mount **VCB** Conduit Box Mounting Plate With (3) 1/2” Threaded Conduit Holes	**BZ** Bronze **BK** Black **GY** Grey **SBK** Smooth Black **WH** White **SWH** Smooth White **GP** Graphite **GY** Grey **SL** Silver Metallic **ZFP** Zinc-Free Primer Coat **CC** Custom Color	**PC-120 PC-208** **PC-240 PC-277** Button Type Photocell **DIM** 0-10v Dimming Driver No Controls **DTO** Dim to Off Driver **WSP6-L2 WSP6-L3 WSP6-L7** 8’ Mounting Height / 9-20’ Mounting Height / 21-40’ Mounting Height **WSC-8 WSC-20 WSC-40** 8’ Mounting Height / 9-20’ Mounting Height / 21-40’ Mounting Height *The WSC option will require (1) FSIR 100 remote for programing **Z10** or **Z18** Zhaga 4 Pin Receptacle **VWC** Visionaire Wireless Controls Consult Factory	**CLS** Backside cutoff shield	**BP** Back Plate **BAA** Buy America(n) Act Compliant **BABA** Build America Buy American

Housing
Heavy duty cast aluminum housing with internal heat sink for maximum heat dissipation. Silicone gaskets are utilized throughout the fixture for weather tight operation.

Mounting
A Wall Mount bracket can be secured directly to a 4”-5” recessed junction box.

Thermal Management
The PGAS-1 series provides excellent thermal management by mounting the LEDs to the substantial heat sink within the housing. This enables the Luminaire to withstand higher ambient temperatures and driver currents without degrading LED life.

Optical System
The hightest lumen output LEDs are utilized. High-performance acrylic optics feature industry leading optical distributions. Acrylic optics are impact-resistant and rated to 94 percent translucence.
L70 life of our LEDs is rated over 100,000 hours (for 530 mA), The optical system qualifies as IES full cutoff to restrict light trespass, glare and light pollution for neighborhood-friendly lighting.
- LED light engines come in multiples of 16 LEDs.
- LED Wavelength 590nm

Quali-Guard® Finish
The finish is a Quali-Guard® textured, chemically pretreated through a multiple-stage washer, electrostatically applied, thermoset polyester powder coat finish, with a minimum of 3-5 mils thickness. Finish is oven-baked at 400º F to promote maximum adherence and finish hardness.
- All finishes are available in standard and custom colors.
- Finish is guaranteed for five (5) years.

Electrical Assembly
The PGAS-1 LED series is supplied with a choice of 350 or 530 high-performance LED drivers that accept 120v thru 480v, 50 Hz to 60 Hz, input.
- Power factor of 90%.
- Rated for -40°C operations.
- 10 kV surge protector supplied as standard.

Warranty
Five (5) year Limited Warranty on electrical components, Five (5) year on finish. For full warranty information, please visit visionairelighting.com.

Options
- Wattstopper Plus
- Wattstopper FSP-211 Motion Sensor/Control
- Dimming Driver
- Dim To Off Driver
- Button Type Photocell
- Backside cutoff shield
- Back Plate
- Zhaga 4 Pin Receptacle
- Visionaire Wireless Control
  - Enables high end trim
  - Based on Zigbee wireless communication protocol
- BAA / BABA

Listings
- PGAS-1 is cUL listed, suitable for wet locations.
- IP66 Rated
- Powder Coated Tough™
- Turtle Safe
- Certified Wildlife Lighting

3000K or lower must be selected with a fixed mount for IDA certification.
Fixed mount must be selected for IDA dark sky certification.

Motion Sensor Default Settings									
FSP - 211	**High Mode**	**Low Mode**	**Time Delay**	**Cut Off Delay**	**Sensitivity**	**Hold Off Setpoint**	**Photocell On/Off**	**Ramp Up Time**	**Fade Down Time**
WSC - Default	10V	1V	5 Minutes	1 Hour	Maximum	4ft	Disabled	Disabled	Disabled
WSC Range	0-10V	0-9.8V	5-30 Minutes	1-5	Low, Med, Max	1-250FC	1-250FC	1-60 Dec	1-60Dec
*Settings can be field modified with the FSIR-100 Programming remote									

Photometric Optical Summary

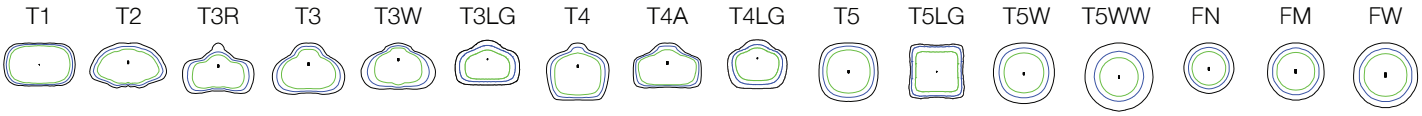

Dimensions

Width:	PGAS-1 13.96”
Height:	PGAS-1 5.53”
Depth:	PGAS-1 7.50”
Weight:	20 LBS

PGAS-1 Dimensions

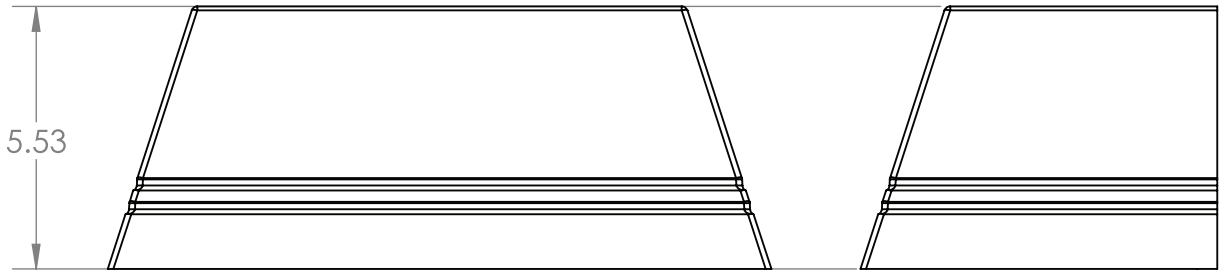

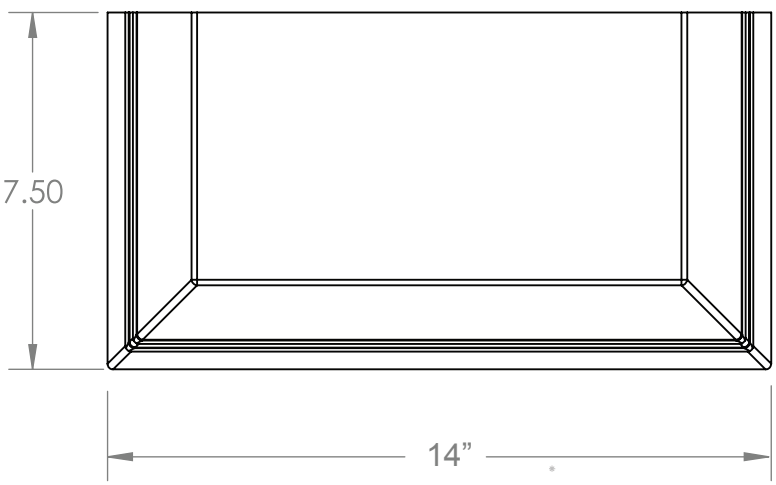

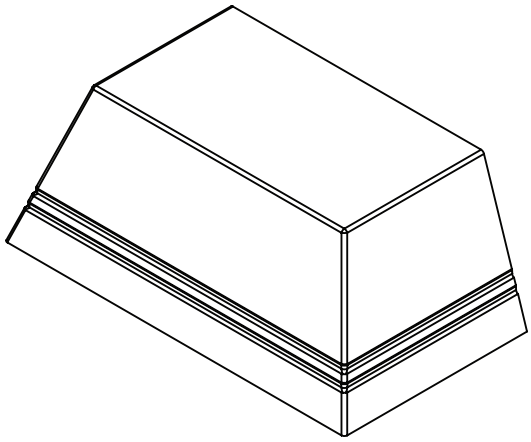

WATTSTOPPER PLUS
FSP-600 Series

The FSP-600 series by Wattstopper PLUS is an integrated luminaire level lighting controller and sensor for indoor/outdoor lighting applications that require networked wireless control. The FSP-600 is designed to integrate directly into exterior, high bay, parking garage, and general site lighting solutions. It is a passive infrared (PIR) sensor and closed loop photosensor.

The FSP-600 series design intends to reduce installer labor time and make on-site start up easy for technicians.

Once commissioned and paired to a Wattstopper PLUS network, the devices can measure both motion and daylight contribution in order to automatically switch or dim lighting. It also provides the ability to communicate to other fixtures in the space without any front-end devices.

The Wattstopper PLUS FSP-600 series is available in a few different options including: internal, external straight nipple, and external drop nipple. Sensor lens options sold separately and should be ordered based on designed mounting height and desired finish.

FSP-621

FSP-200 Series

The FSP-200 series sensors provide multi-level control based on motion and/or daylight contribution. They control 0-10 VDC LED drivers or dimming ballasts, as well as non-dimming ballasts and, with an FSP-Lx Lens, are rated for wet and cold locations. All control parameters are adjustable via a wireless configuration tool capable of storing and transmitting sensor profiles. The FSP-200 series is available in two different voltage configurations adding flexibility to your fixture design or project.

Typically, the sensor ramps lighting On to the selected High mode level when motion is detected and the ambient light level is below the hold off setpoint. After the sensor stops detecting movement and the time delay elapses, lights fade to the Low mode level. If there is no motion during the subsequent cut off time delay, the lights will turn Off. For dusk to dawn control, the integral photocell can switch the lights On and Off based on the ambient light level so that lighting remains on overnight even without motion detection.

Initial setup and subsequent sensor adjustments are made using a Wireless Handheld Configuration Tool (FSIR-100). This tool enables adjustment of parameters including high and low modes, sensitivity, time delay, cut off and more. The FSIR-100 is also used to initiate automatic calibration of the FSP-2x1B ambient light level setpoint. The setpoint is used to hold the controlled lighting off or at a low level when there is sufficient daylight. The wireless tool stores up to six sensor parameter profiles to speed configuration of multiple sensors.

FSP-211

FSP-221

Lens with Shroud Dimensions

The FSP-Lx-S models include a shroud, which blocks high-angle light coming from the fixture, to improve photocell performance. With the shroud attached, the dimensions for all three lenses are identical

FSP-L2-S and FSP-L3-S

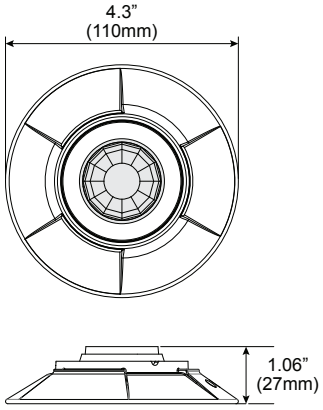

FSP-L7-S

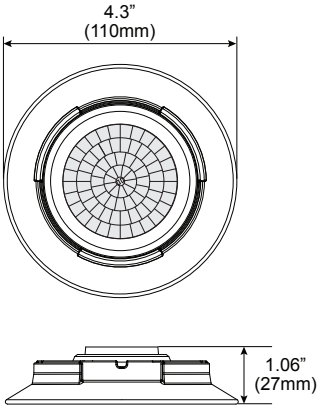

COVERAGE

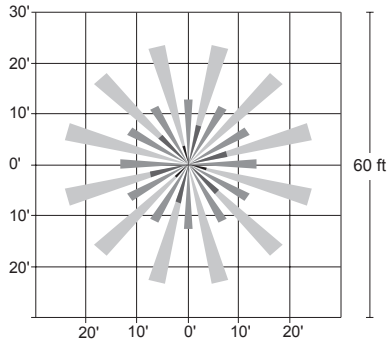

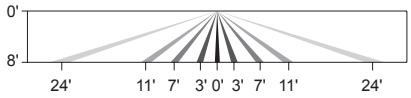

FSP-L2 top and side coverage patterns

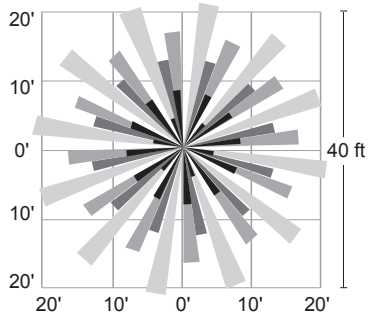

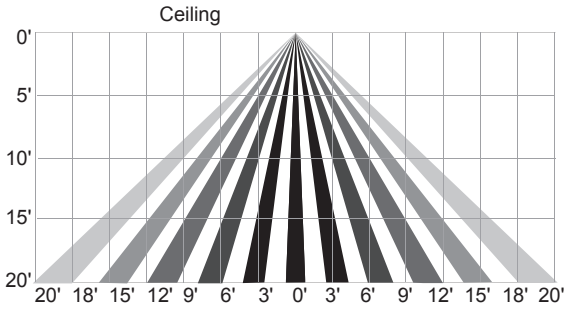

FSP-L3 top and side coverage patterns

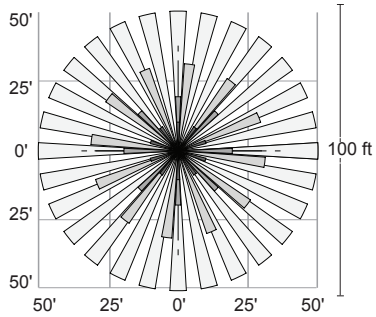

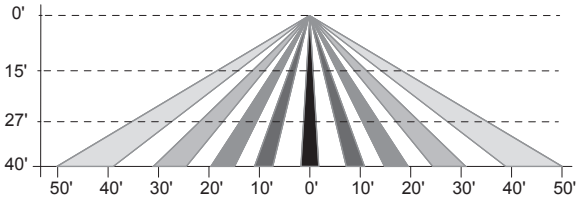

FSP-L7 top and side coverage patterns

TS AMBER LUMENS																			
MODEL	# LEDs	Current (mA)	T1	T2	T3R	T3	T3W	T3LG	T4	T4A	T4LG	T5	T5LG	T5W	T5WW	FN	FM	FW	WATTS
PGAS-1	16	350	1210	1174	1189	1173	1219	1186	1183	1240	1170	1235	1194	1213	1158	1127	1125	1257	13
		530	1528	1482	1501	1482	1539	1497	1493	1566	1477	1560	1508	1531	1462	1423	1421	1588	21
	32	350	2420	2348	2377	2347	2437	2372	2365	2480	2340	2471	2389	2425	2316	2255	2250	2515	27
		530	3055	2965	3002	2963	3078	2995	2987	3131	2955	3120	3016	3062	2924	2847	2841	3176	42

EFFICACY (LM/W) TS																			
MODEL	# LEDs	Current (mA)	T1	T2	T3R	T3	T3W	T3LG	T4	T4A	T4LG	T5	T5LG	T5W	T5WW	FN	FM	FW	WATTS
PGAS-1	16	350	91	88	89	88	92	89	89	93	88	93	90	91	87	85	85	95	13
		530	72	70	71	70	73	71	71	74	70	74	72	73	69	68	67	75	21
	32	350	91	88	89	88	92	89	89	93	88	93	90	91	87	85	85	95	27
		530	72	70	71	70	73	71	71	74	70	74	72	73	69	68	67	75	42

BUG TS

MODEL	# LEDs	Current (mA)	T1			T2			T3R			T3			T3W			T3LG			T4		
			B	U	G	B	U	G	B	U	G	B	U	G	B	U	G	B	U	G	B	U	G
PGAS-1	16	350	1	0	1	0	0	1	1	0	1	0	0	1	0	0	1	0	0	0	1	0	1
		530	1	0	1	1	0	1	1	0	1	0	0	1	0	0	1	1	0	1	1	0	1
PGAS-2	32	350	2	0	2	1	0	1	1	0	1	1	0	1	1	0	1	1	0	1	1	0	1
		530	2	0	2	1	0	1	1	0	1	1	0	1	1	0	1	1	0	1	1	0	1

MODEL	# LEDs	Current (mA)	T4A			T4LG			T5			T5LG			T5W			T5WW			FN			FM			FW		
			B	U	G	B	U	G	B	U	G	B	U	G	B	U	G	B	U	G	B	U	G	B	U	G	B	U	G
PGAS-1	16	350	0	0	0	0	0	0	1	0	0	1	0	0	1	0	1	1	0	0	1	0	0	1	0	0	1	0	0
		530	1	0	0	1	0	0	1	0	0	1	0	0	1	0	1	1	0	1	2	0	0	1	0	0	1	0	0
PGAS-2	32	350	1	0	1	1	0	1	1	0	1	1	0	0	2	0	1	2	0	1	2	0	0	2	0	0	1	0	0
		530	1	0	1	1	0	1	2	0	1	2	0	0	2	0	1	2	0	1	3	0	0	2	0	0	2	0	0

PGAS-1- ELECTRICAL LOAD (A)							
Ordering Nomenclature	System Watts	120	208	240	277	347	480
PGAS-1-16LD-3	13	0.11	0.06	0.05	0.05	0.04	0.03
PGAS-1-16LD-5	21	0.18	0.10	0.09	0.08	0.06	0.04
PGAS-1–32LD-3	27	0.23	0.13	0.11	0.10	0.08	0.06
PGAS-1-32LD-5	42	0.35	0.20	0.18	0.15	0.12	0.09
ELECTRICAL LOAD DATA IS ESTIMATED							

Output Vs. Wavelength

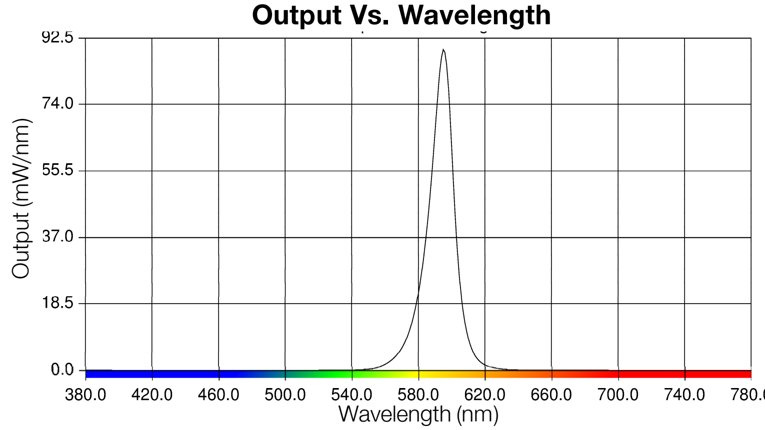

Bracket Wall Mount Support
Compatible with 4” and 5” J-Box

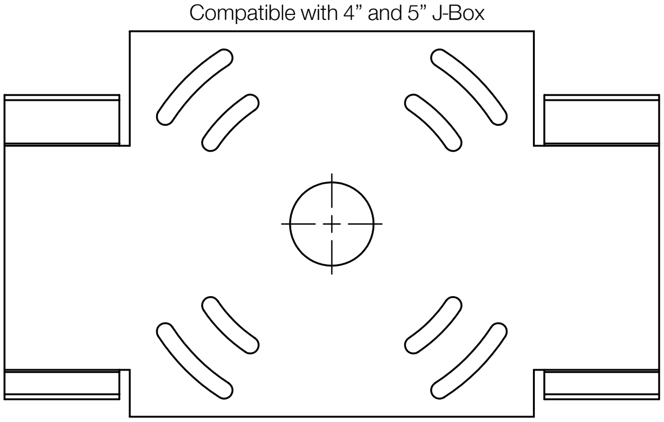

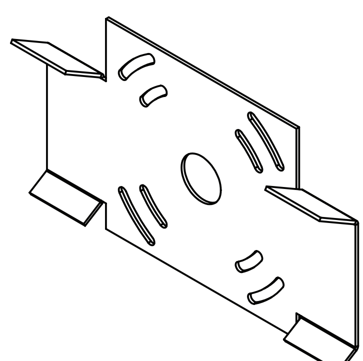

ISOMETRIC VIEW